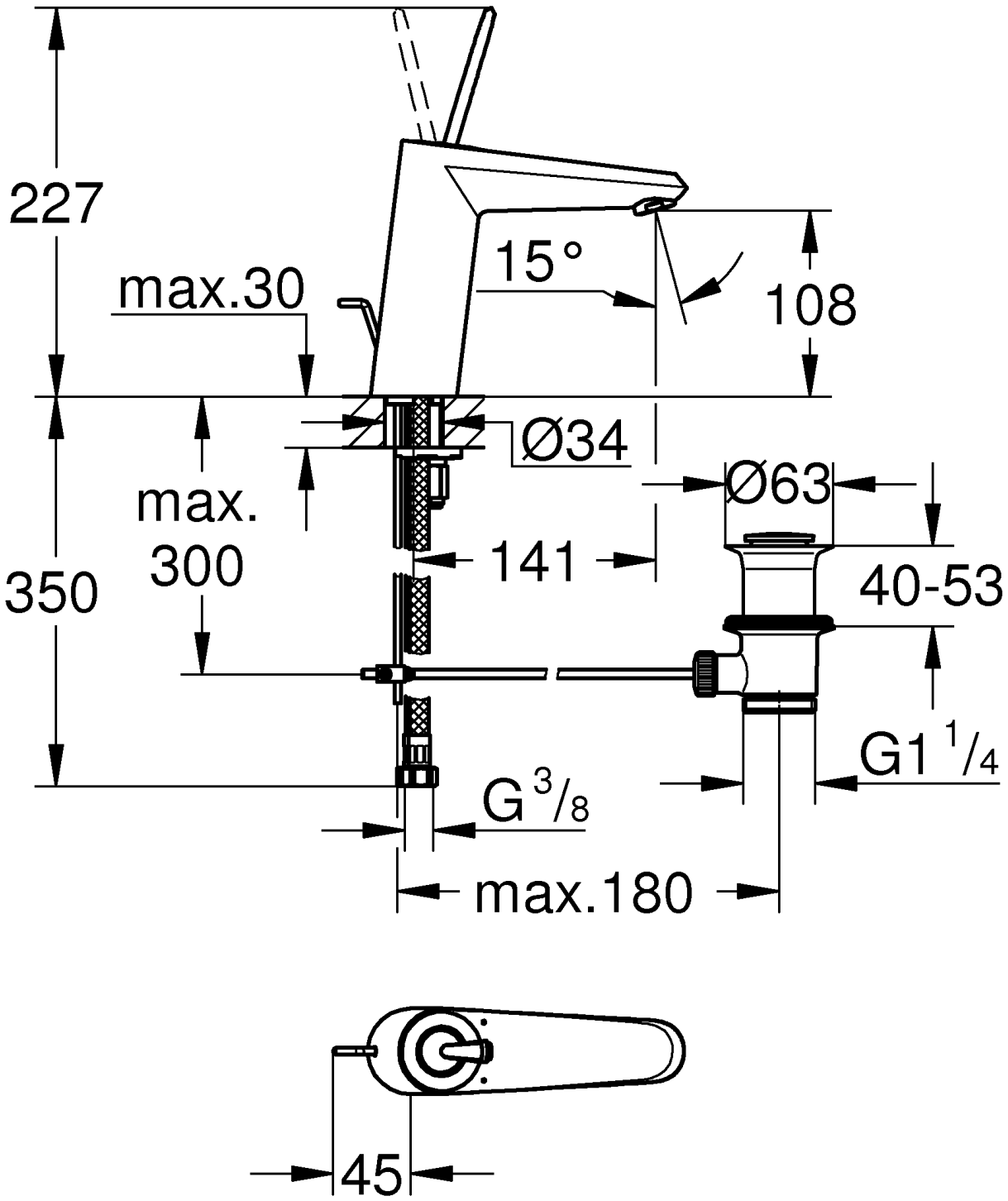
227
max.30
15°
108
Ø34
Ø63
max.
300
141
350
40-53
G1 1/4
G 3/8
max.180
45